KEK-77-25
March 1978

THE KEK 1 M HYDROGEN BUBBLE CHAMBER

by

Yoshikuni DOI, Osamu ARAOKA, Kohei HAYASHI, Yoshio HAYASHI,
Hiromi HIRABAYASHI, Nobuhiro ISHIHARA, Hiromichi KICHIMI,
Hideyo KODAMA, Takashi KOHRIKI, Kimio MORIMOTO, Fumio OCHIAI,
Taro OHAMA, Yuji OTAKE, Takahiro SATO, Ryuhei SUGAHARA,
Mituhiko TAINO, Kiyosumi TSUCHIYA, Norihiko UJIIE,
Yoshio YOSHIMURA and Kasuke TAKAHASHI

National Laboratory for High Energy Physics
Oho-machi, Tsukuba-gun, Ibaraki-ken, 300-32, Japan

NATIONAL LABORATORY FOR
HIGH ENERGY PHYSICS
OHO-MACHI, TSUKUBA-GUN
IBARAKI, JAPAN

KEK Reports are available from

Library
National Laboratory for High Energy Physics
Oho-machi, Tsukuba-gun
Ibaraki-ken, 300-32
JAPAN

Phone: 02986-4-1171
Telex: 3652-534 (Domestic)
(0)3652-534 (International)
Cable: KEKOHO

THE KEK 1 M HYDROGEN BUBBLE CHAMBER

Yoshikuni DOI, Osamu ARAOKA, Kohei HAYASHI, Yoshio HAYASHI,
Hiromi HIRABAYASHI, Nobuhiro ISHIHARA, Hiromichi KICHIMI,
Hideyo KODAMA, Takashi KOHRIKI, Kimio MORIMOTO, Fumio OCHIAI,
Taro OHAMA, Yuji OTAKE, Takahiro SATO, Ryuhei SUGAHARA,
Mituhiko TAINO, Kiyosumi TSUCHIYA, Norihiko UJIIE,
Yoshio YOSHIMURA and Kasuke TAKAHASHI

National Laboratory for High Energy Physics
Oho-machi, Tsukuba-gun, Ibaraki, 300-32, Japan

Abstract

A medium size hydrogen bubble chamber has been constructed at the National Laboratory for High Energy Physics, KEK. The bubble chamber has been designed to be operated with a maximum rate of three times per half a second in every two second repetition time of the accelerator, by utilizing a hydraulic expansion system. The bubble chamber has a one meter diameter and a visible volume of about 280 ℓ. A three-view stereo camera system is used for taking photographic pictures of the chamber. A 2 MW bubble chamber magnet is constructed. The main part of the bubble chamber vessel is supported by the magnet yoke. The magnet gives a maximum field of 18.4 kG at the centre of the fiducial volume of the chamber. The overall system of the KEK 1 m hydrogen bubble chamber facility is described in some detail. Some operational characteristics of the facility are also reported.

1. Introduction

A plan to construct a medium size hydrogen bubble chamber for experiments with the 12 GeV proton synchrotron of the National Laboratory for High Energy Physics, KEK, was initiated during the year 1970, when the final decision to establish the present KEK was formally made by the Japanese Government. The basic idea of constructing a 1 m hydrogen bubble chamber was to make a bubble chamber body with the largest possible diameter, inside the available field of an already existing 2 MW bubble chamber magnet, as well as to utilize a similarly existing 60 ℓ/hr hydrogen liquefier, both of which were built for a 75 cm test chamber constructed at the Institute for Nuclear Study (INS) of the University of Tokyo, by the Proton Synchrotron Study Group.1)

The principal characteristics of the planned 1 m bubble chamber were as follows ; (1) the chamber should have a diameter as large as possible inside the available magnetic field of about 18 kG ; (2) the chamber should be able to be expanded by double or triple pulsing during half a second, by utilizing a hydraulic power supply, so that it could make a selective exposure by using a counter triggering system ; (3) the bubble chamber should be operated cryogenically as efficiently as possible in order to utilize the existing 60 ℓ/hr hydrogen liquefier with the least modification of the cooling system ; and (4) a Scotchlite-reflector system was used because of the limitation due to the available structure of the old existing 2 MW bubble chamber magnet.

The construction of the bubble chamber started in 1971 at the Tanashi-branch of KEK, in the campus of INS, where the old existing associated facilities such as the hydrogen liquefier and the 2 MW magnet, were housed at that time. These facilities were then transferred from the Tanashi-branch of KEK to the present bubble chamber building in the Tsukuba-site of KEK. This building, which was completed at the end of 1973, has an area of about 400 m^2. It accommodates not only the bubble chamber and the magnet yoke, but also rooms for hydrogen gas compressors, purifiers and for the hydrogen liquefier.

The main components of the KEK 1 m hydrogen bubble chamber (KEK 1 m HBC) are ; (1) a bubble chamber body, (2) the 60 ℓ/hr hydrogen liquefier, (3) an expansion system having a 110 kW hydraulic power supply, (4) an optical system with a three view stereo camera and film-handlers, and

(5) the 2 MW bubble chamber magnet system.

The construction and modification of these principal components, and associated facilities of the chamber, was completed by the end of 1975. The various test-operations were made during the years 1976 and 1977.

Another very important facility needed for bubble chamber experiments was of course a beam line, which was completed at the end of the 1976 fiscal year, as will be reported separately. A deuterium filling system for the bubble chamber has been completed at the design stage,[2,3] and manufacture of the components of the system is now under way. The system will be completed during the year 1978.

This report covers the general description of the KEK 1 m HBC and some detailed discussions on the principal components associated to the bubble chamber. Various operational characteristics are also discussed in some detail. However, numerical data on the magnetic field of the chamber and detailed information on the optical parameters of the chamber optics will be reported separately.

2. The Outline of the KEK 1 m HBC and its Associated Facilities

Figure 1 shows a very simplified plan-view of the KEK 1 m bubble chamber facilities and their locations. The bubble chamber beam line extends about 110 m from a fast-extracting point alongside the 12 GeV accelerator main-ring, and supplies beams of protons and pions up to 6 GeV/c, at the present time. It is expected to supply beams of antiprotons up to about 2.5 GeV/c and of kaons up to about 4.0 GeV/c within a year or so, by using a doubly-staged DC-separator system.

The bubble chamber building consists of two separate structures; the main bubble chamber building and the wing for control and operational facility rooms, as shown in Fig. 1. The hydraulic expansion power supply is accommodated in a separate small house next to the bubble chamber main building.

The building has its main room at the end of the beam line, and has three other separate compartments, each of which has its own facilities: (1) a room for a hydrogen gas compressor system, (2) a section for the hydrogen high pressure cryogenic purifiers and also for the deuterium compressor and purifier system, (3) a room accommodating the 60 ℓ/hr hydrogen liquefier, the 4000 ℓ liquid hydrogen tank and the 1000 ℓ emergency reservoir tank for liquid deuterium. The electrical power supply for the 2 MW bubble chamber magnet is located nearby the bubble chamber building. It has its own water cooling facility.

In what follows, we will give some description of these principal facilities of the KEK 1 m bubble chamber ; the 1 m bubble chamber body and its cooling and filling system are described in section 3, and the hydraulic expansion system in section 4. The optical structure of the chamber and the film handling system are described in section 5, and the 2 MW bubble chamber magnet and its power supply are described in section 6. In sections 7 and 8 we give some operational characteristics of the chamber and our conclusions.

3. The 1 m Bubble Chamber Body and its Cooling and Filling System

3-1. The layout of the 1 m bubble chamber body

The KEK 1 m HBC was designed to be operated with about 280 ℓ of visible volume of liquid hydrogen at a temperature of 26 K under a pressure of about 5 atm, or with deuterium at about 32 K under 7 atm pressure. Principal parameters for the KEK 1 m HBC are shown in Table 1.

The hydrogen liquefier has the capability to make about 65 ℓ/hr of liquid hydrogen, which is usually stored in a cryogenic reservoir tank of 4000 ℓ. The liquid hydrogen in the 4000 ℓ reservoir tank is then transferred to the cooling-loops of the bubble chamber main body. This cooling system is entirely separated from the hydrogen gas filling system to the chamber. The complete separation of the hydrogen gas filling system has been done so that the deuterium gas filling system can be easily made with the least consumption of deuterium gas, when the chamber is to be operated as a deuterium bubble chamber. Figure 2 is a schematic diagram of the cryogenic system of the KEK 1 m HBC facility. In this section, we will describe the main parts of the bubble chamber and the cryogenic system of the chamber.

3-2. The bubble chamber vessel and vacuum tank

Figure 3 shows a cross section of the bubble chamber vessel and vacuum tank as assembled in the bubble chamber magnet. The bubble chamber vessel consists of a chamber body and supporting cylinder, with three heat exchangers : firstly, a neck-cooler, secondly , a piston cylinder cooler and thirdly, a gas-cooler. In addition to these three cooling cylinders, a heat-insulating cylinder between the upper cooler, the gas cooler, and the main support top-plate, completes the about 170 cm long supporting cylinder that connects the chamber body to the top-plate.

The bubble chamber contains about 430 ℓ of liquid hydrogen under an expansion piston, called a "cold-piston". A fiducial volume of about 280 ℓ is visible to a three-view camera system, through a 1 m diameter viewing window. The window-glass is 14.5 cm in thickness and is affixed to the chamber body with a titanium-made window-frame by using an "inflatable gasket" to make a seal for the vacuum as shown in Fig. 4.

The chamber body is made of stainless-steel called modified CK-20, composed of 50 % Fe, 23 % Cr, 23 % Ni, 3.8 % Mn and 0.2 % Si because of special considerations regarding its austenic stability at very low temperature.

The window-glass is made of BK-7 type optical glass, which has a refractive index of 1.516. The inflatable vacuum-sealing gasket, is made of ring shaped inflatable tubing pressurized by helium gas inside the tube, and the seal is made with two indium O-rings fitted to grooves carved on each surface of the gasket tube, as shown in Fig. 4. One more groove is prepared for pump-out between the outer and the inner indium seals. When the chamber is cooled down, the gasket is pressurized up to as much as 30 atm, with helium gas, to ensure a vacuum-sealing between the window-glass and the chamber body.

A 3 mm thick plate of SUS-316L stainless steel, with the dimensions 51 cm (L) × 21 cm (W) is mounted on each side of the chamber body as a beam window.

A bellows-sealed valve made by Nippon Kosteu K.K., called a "cold valve" is furnished at the bottom of the chamber as shown in Fig. 5. The cold valve is operated by pressurized helium gas, and permits the chamber to be cleared of the working liquid when necessary.

The neck-cooler is designed to exchange heat of about 200 W from the chamber. It has eight copper fins fabricated inside the wall of a SUS-316L stainless cylinder which is 45 cm in inner diameter, and 40.5

cm in height, as shown in Fig. 6. The cooling-coil, which is soldered on the inner wall of the neck-cooler cylinder, is a copper tube of 1 mm thick, 10 mm inner diameter and total length 2672 cm. The total surface area inside the neck-cooler is about 12860 cm^2 with 1010 cm^2 surface area for each fin. A nitrogen cooling coil made of a copper tube 1 mm thick, 10 mm in inner diameter and about 1850 cm in length is also wound 13-turns times round the outside surface of the neck-cooler.

The piston cylinder, which is a guide cylinder for the expansion cold-piston, is made of SUS-316L stainless steel with a height of 30 cm, inner diameter of 45 cm and wall thickness of 1 cm. The inside of the cylinder is plated with chromium in order to harden the surface. The cylinder also has a cooling-coil on its outside surface, made of copper tube of 1 mm thick, 6 mm inner diameter and 1960 cm total length.

The gas-cooler is a copper cylinder with a height of 30 cm, inner diameter of 45.5 cm and wall thickness of 1 cm. This cylinder has a similar cooling coil as used in the neck-cooler, with a copper tube of a total length about 1377 cm. The inner surface of the cylinder has vertical pleats of a pitch of 1.4 mm and a depth of 1 mm, in order to provide better heat-exchange with the hydrogen gas. The total area of the inner surface is about 3737 cm^2, twice as large as in the case without pleats. The gas-cooler has a heat-exchanging power of about 1 kW to the working hydrogen gas.

The heat-insulating cylinder has a height of about 65 cm, an inner diameter of 45.5 cm and a wall of 5 mm thick made of SUS-316L stainless steel. This cylinder insulates the cooling cylinders from the supporting main top-plate, which is usually at a room temperature. This cylinder has a guide-frame to ensure smooth moving of the expansion cold-piston rod. Many sheets of Teflon are packed inside the cylinder, in order to reduce heat influx due to gas turbulences induced by the motion of the cold-piston.

The top-plate is made of SUS-316L stainless plate of thickness 7.5 cm, and dimensions of 168 cm (L) X 81.5 cm (W). This plate suspends the complete bubble chamber body inside the vacuum tank. The whole bubble chamber assembly described above is then supported and housed in the vacuum tank which is supported by a frame fixed on the bubble chamber magnet yoke as shwon in Fig. 3.

The vacuum tank has a height of about 320 cm and a cross sectional dimension of 156 cm (L) × 69.5 cm (W). The tank has a projecting elliptical vacuum cylinder on its front side, which we call a "camera extension". It has a legnth of 144 cm and a major axis of 101.5 cm. The vacuum tank and the camera extension cylinder are made of SUS-305J1 stainless plate, with a thicknesses of 32 mm and 20 mm respectively.

The camera extension has, on its ending flange confronting the bubble chamber camera system, six viewing port-holes, three of which are used for taking photographic pictures and the others for monitoring. The optical glass-disks, each of which is made of quartz of 13 cm diameter and 4 cm thickness, are sealed with a neoprene seal against the viewing port-hole of the ending flange of the camera extension.

Two beam-windows for incoming and outgoing particles are made at the either side of the vacuum tank, each with dimensions of 69 cm (L) × 39 cm (W). The window-plate is of SUS-305J1 stainless plate with a 3 mm thickness. Figure 7 shows an overall view of the 1 m bubble chamber, wrapped with aluminized Mylar sheets, called superinsulator sheets.

3-3. The hydrogen liquefier and the associated cryogenic facilities

The hydrogen liquefier and cryogenic system of the KEK 1 m HBC consists of high-pressure hydrogen gas storage bottles, a low-pressure gas holder, hydrogen compressors, hydrogen-gas purifiers, the 60 ℓ/hr hydrogen liquefier, and a 4000 ℓ reservoir tank. The basic flow diagram of the hydrogen liquefier and cryogenic system for the bubble chamber facility has already been shown in Fig. 2.

The most important and prominent feature in the flow diagram is that the system utilizes a 4000 ℓ liquid hydrogen reservoir tank between the hydrogen liquefier and the bubble chamber cooling-loops. This 4000 ℓ hydrogen reservoir tank is installed with the aim of using it as a buffer-tank for liquid hydrogen coolant to the bubble chamber, enabling easier control of the bubble chamber operation, independently of the operation of the liquefier. The reservoir tank has the capability to preserve about 4000 ℓ of liquid hydrogen under an operating pressure of up to 11 atm, and was designed to keep natural vaporizing consumption to para-hydrogen at less than 1 % per day. The consumption rate was measured in overall test operations and was found to satisfy this condition.

Thermal insulation of the reservoir tank is achieved by "super-insulation" which consists of vacuum and aluminized Mylar sheets of about 450 layers. The inner and outer vessels and pipings are made of SUS-304 stainless steel. Pressure and liquid level in the reservoir tank are controlled by pneumatic control valves in the hydrogen liquefier.

The hydrogen liquefier is of simple "Linde type", and was constructed by the group of Tokyo Works of Nippon Sanso K.K.. The liquefaction rate of the hydrogen liquefier was measured in combination with the 4000 ℓ liquid hydrogen reservoir tank in several overall test operations of the KEK 1 m HBC. It was found that the maximum liquefaction rate was about 72 ℓ/hr at 3.5 atm pressure of the reservoir tank in the case when the two hydrogen compressors were working in full parallel-operation. This rate is equivalent to 1300 W of refrigeration at 25.5 K. Since we expect about 700 W for normal liquid hydrogen operation of the bubble chamber, this figure seems to be reasonable. However, the cryogenic cooling power of this liquefier system may be a little tight for operation of the chamber with deuterium, considering the larger heat loss due to the longer expansion stroke.

Principal specifications of other associated apparatus are as shown in the following list.

(1) High-Pressure Hydrogen Gas Storage Bottles
    Capacity : 175 Nm^3, 3 units, and 1125 Nm^3, 1 unit
    Pressure : 150 atm

(ii) Low-Pressure Gas Holder
    Capacity : 30 Nm^3
    Pressure : 1.02 atm

(iii) Hydrogen Compressor
    Type : 4-stage, oil-lubrication
    Capacity : 160 Nm^3/hr, 2 units
    Pressure : 150 atm
    Electrical Motor Power : 60 kW, 2 units

(iv) Hydrogen Gas Purifiers
    (1) Oil adsorbers : filled with Alumina-gel
    (2) Water dryer : filled with Molecular-sieves 5A
    (3) Cryogenic purifier : filled with Molecular-sieves 5A,
        and cooled by liquid nitrogen

In addition to these facilities three liquid-hydrogen transfer tubes are installed between (1) the hydrogen liquefier and the 4000 ℓ reservoir tank, (2) the reservoir tank and the bubble chamber, and (3) the chamber and the liquefier. The lengths of these three transfer tubes are 347.2 cm, 694 cm, and 586 cm respectively. The most complicated transfer tube is the first one, which has a triple structure as follows, liquid hydrogen being transferred into the reservoir tank flows through the inner most tube, and the returning hydrogen gas from the reservoir tank to the heat exchanger of the liquefier goes through a second-layer tube which enveloped the first one, finally an outer tube of vacuum-pipe insulates heat conduction by means of a vacuum and superinsulator sheets. This triple-layared tube has been working well and the heat-loss of the tube is found to be about 1 W per meter at 20 K. The other two transfer tubes are double-layared and have similar structure and similar performances to the first one although they are much less complicated.

3-4. Thermal insulation of the bubble chamber

Thermal radiation from the warm surface of the vacuum tank is shielded by about 30 layers of superinsulator sheets. The bubble chamber is well wrapped with about 60 layers of superinsulator sheets, except for the area of the viewing window. The radiative heat loss from the camera extension through the window-glass is reduced as far as possible by employing a cold hydrogen-gas cooled elliptic cylinder called "camera extension shield" with a length of about 110 cm and a 95 cm major axis. This camera-extension-shield is wrapped with about 60 layers of superinsulator sheets around the outside, and is compactly inserted inside the camera extension.

The pressure in the vacuum tank is kept as low as 2×10^{-6} Torr whenever the bubble chamber is at liquid hydrogen temperature.

The amount of radiative heat leak coming through the window glass from the camera extension shield to the bubble chamber body was estimated to be about 18 W. The radiative loss from the warm surface of the vacuum tank through the superinsulator layers was considered to be negligible in comparison with the leak mentioned above. The amount of heat loss due to the conduction through the supporting cylinders and others was estimated to be about 52 W. The total static heat loss of

70 W thus estimated turned out to be in good agreement with the results calculated from data obtained by a static evaporation experiment in the chamber.

3-5. Cooling system

The cooling system of the bubble chamber consists of four loops as shown in Fig. 8 : the nitrogen cooling loop, the neck-cooler cooling loop, the piston cylinder cooling loop and the gas-cooler cooling loop. The nitrogen cooling loop through which liquid nitrogen passes is only used when the chamber is to be kept as cold as liquid nitrogen temperature.

For cooling and temperature control of the bubble chamber, the neck-cooler cooling loop is used. Liquid hydrogen is transferred from the 4000 ℓ liquid hydrogen reservoir tank at temperature of about 24 K. The liquid hydrogen temperature in the bubble chamber is converted through the vapor-pressure of a hydrogen-gas-filled sensing element, to an air-pressure signal by a pressure transmitter, which makes a derivative signal to a temperature controller TRC-2. The temperature controller produces an actuating signal by comparing a measured variable with a set value, and then amplifies it to give an output air-pressure signal to a throttling valve PCV-3. The PCV-3 changes the amount of flow of liquid hydrogen coolant in the cooling loop. The coolant temperature of the cooling coil inlet is automatically controlled by a throttling valve TCV-1 which changes the vapor pressure of the liquid hydrogen coolant.

The piston cylinder cooling loop suppresses the boiling of liquid hydrogen around the cold piston. A throttling valve PCV-7 of the cooling loop is automatically controlled by a controller PRC-7 so that the pressure of the liquid hydrogen coolant is always kept lower than the saturated vapor pressure of the working liquid in the chamber.

The gas-cooler loop is the pressure control loop of the chamber, and has only one valve named PCV-4, which controls the flow rate of liquid hydrogen coolant in the gas-cooler coil. The pressure of the bubble chamber is converted into an air-pressure signal by a pressure transmitter. This signal is led to the pressure controller, PIC-4, the output signal from this controller operates a throttling valve, PCV-4, and thus the hydrogen gas in the volume above the piston is condensed into liquid through heat exchange at the inner surface of the gas-cooler. The temperature and pressure control loops are also used to cool the chamber down to liquid hydrogen temperature and to make liquid hydrogen in the chamber itself.

3-6. Filling system

When the chamber is cooled down, a filling system supplies hydrogen gas into the chamber at a point just below the neck-cooler cylinder. The filled-gas is liquefied at the surface of the neck-cooler. Filling gas is sent from liquid hydrogen gas containers, through a cryogenic, liquid nitrogen cooled, purifier of 200 Nm^3 total capacity, at a rate of 10 Nm^3/hr. The purity of supplied hydrogen gas is monitored by means of gas-chromatography, so that the impurity in the supplying gas is always kept lower than a few ppm.

As already mentioned, the hydrogen gas filling system of this bubble chamber is entirely separated from a deuterium gas filling system which needs very special gas-handling system because of economy and purity of the deuterium gas to be used. The deuterium gas filling system of this chamber is still under construction, and will be reported separately.

3-7. Safety considerations

One of the important items in a hydrogen bubble chamber facility and its operation is safety consideration. In the KEK 1 m HBC facility there are provided several safety equipments to satisfy safety requirements laid down by the government. There is a hydrogen gas ventilation piping system in the main vacuum tank and other main sub-systems. The ventilation piping system includes various arrangements of manually operated vent valves, safety-valves, and burst-disks, all in parallel operation at each sub-system.

Gas pressure in these systems can be manually decreased if necessary, and ventilation of hydrogen gas starts automatically whenever gas-pressure level rises abnormally.

In case of emergency in the bubble chamber main vessel, liquid hydrogen in the chamber can be immediately released to the atmosphere outside of the roof of the building through the main ventilation piping, since the cold valve equipped at the bottom of the chamber is connected as described previously.

4. An Expansion System

In the KEK 1 m HBC, expansion-recompression of the bubble chamber is made by means of a cold piston moved by a hydraulic power system. The system has been designed and constructed to produce a maximum increase in a liquid hydrogen volume of about 2.1 %, and to operate up to five times every two seconds. Expansion parameters are summarized in Table 2. The cold piston and the actuator are shown schematically in Fig. 3.

The cold piston is made of SUS-316L. The piston has two 40 mm wide Teflon-rings on its circumference. There remains a small clearance of about 0.1 mm between the piston and the cylinder at the operating temperature of the chamber. The piston has a total weight of about 42 kg. The cold piston is connected to a hydraulic actuator which is mounted on the chamber top-plate.

In this actuator system, there are two servo valves of "Pegasus"-1640H type used to control hydraulic oil at a pressure of 210 kg/cm^2. Figure 9 gives a circuit diagram of this hydraulic system. Four accumulators of total capacity of 40 ℓ are installed near the servo valves in order to avoid oil pressure decrease due to piping in a high expansion-rate.

The hydraulic power supply for the expansion system is located in a separate small house about 30 m from the actuator. Two oil-pumps run at an oil pressure of 210 kg/cm^2. The fluid flows through the accumulator at a rate of 300 ℓ/min, transferred in a piping of 40 mm inner diameter. Another pump runs at a pressure of about 75 kg/cm^2 for hydrostatic bearings. Contamination in the oil is usually removed up to the level specified as NAS-4 by utilising a filter of 3 μm in size, named "Paul". The phosphoric-ester oil usually called "Fyrquel-300" is used for power transmission fluid because its viscosity is quite suitable for pumps, and also because the oil has good chemical properties due to its incombustibility. Since the oil is corrosive, Viton O-rings are used for sealing. The power supply has an oil reservoir tank of total volume of about 2000 ℓ. The reservoir tank, pipings, and the actuator has been well processed before practical usage, by a method of flushing a phosphoric acid.

The dynamical parameters of the expansion can be calculated with reference to Figs. 10 and 11. The complete expansion-recompression cycle time takes about 35 msec for 1 % expansion volume, and the expansion pulse has a 10 % to 90 % rise-time of about 12 msec. Figure 12 shows the movement of the cold piston, and the dynamical pressure of liquid hydrogen in the chamber. The movement of the cold piston agrees quite well with the estimated value. The pulse shape of the piston movement or the wave-form of the dynamical pressure is led to a computer data logger (a system called YODIC-100) through a wave form analyser, and is checked up whether the wave form and the timing of the incoming beam pulse are properly set. If any adjustment of the timing or the shape of the piston movement is necessary, the input pulse is changed through the DA-converter of the wave form analyser.

5. Optics and a Film Handling System

5-1. Elements of the optical system

The optical system of the KEK 1 m HBC consists of a Scotchlite light-reflector, a 1 m diameter viewing window, three small optical glass-disks on the camera-extension flange, flash-tubes for illumination, lenses and cameras for the three view stereo-photograph, and a camera controller as shown in Fig. 3. The bubble chamber pictures are taken by these three cameras in a bright field illumination. An unperforated 35 mm Minicopy film is used for the camera. In addition to this three view stereo-camera system, this bubble chamber employs a special monitoring camera which enables one to take a single shot picture of the bubble chamber by using a Polaroid camera with a special lens. This monitoring one-shot camera system turns out to be very convenient for a quick check of the bubble chamber working status.

5-2. Illumination

A sheet of Scotchlite SPR-1042 made by the Minnesota Mining and Manufacturing Co. is used as a retro-directive light reflector, on which the back-fiducials are marked.

The 1 m viewing window-glass is made of borosilicate crown glass corresponding to the optical glass of the BK-7 type manufactured by Ohara Glass Works. The dimensional parameters of the window-glass, namely its size, parallelity, flatness, refractive index and front fiducial marks are also given in Fig. 13. On the ending flange of the camera extension, there are six viewing port-holes, three of which are used for viewing holes for the three view stereo-camera system. A quartz disk of 130 mm diameter and 40 mm thickness, with refractive index of 1.548 is used for the viewing hole. This glass-disk of the camera-extension flange is strong enough to stand up to vacuum-pressure, or even to a thermal shock due to temperature change from 300 K to 80 K in emergency.

A circular xenon flash tube is mounted surrounding the frame of the lens. The tube gives light of about 5 to 70 J during a period of about 200 μsec. With the lens aperture set at f/11, the flash tube needs to emit only 15 J to take pictures with the best contrast on the film, which is the Fuji Minicopy film HR-II. The flash tube has silver plating on half its area on the rear side of the tube, so as to reflect light and to apply a trigger pulse.

The output pulse of the flash-light is monitored each time by a photodiode. If the flash tube yields a weaker light than required, an alarm is signalled.

5-3. Lenses and cameras

In conventional track-reconstruction programs, it is usually required that the optical axes of all the lenses in a three view stereo camera system should be parallel to each other, and perpendicular to the surface of the bubble chamber window-glass. In order to fulfil this requirement the lens and the film positioning vacuum plate are mounted on a box, keeping the optical axis of the lens perpendicular to the surface of the film plate. An optical instrument is also mounted in the box in order to stamp camera-fiducial marks and stop marks (the Brenner marks) on the current picture. Three boxes, each of which is mentioned above, are installed on one side of a camera-panel, with the optical axes of their own lenses set parallel to each other. On the other side of the panel, are three cameras with a film magazine.

The camera-panel is supported on a movable stage, by means of which an exact distance from the surface of the bubble chamber window-glass to the film plane can be adjusted and fixed. The camera-panel on its movable stage, can be rotated about vertical and horizontal axes to make the lenses perpendicular to a surface of the window-glass. This setting is made by means of an autocollimator.

This three view stereo-camera is able to take three photographs at intervals of every 200 msec within one accelerator flat-top of half second duration. Each camera is operated by a pulse motor for rapid advance of the film. The film is then reeled in by a dc motor. These motors are sealed in the camera so as to be air tight, because of the necessity for safety of operation in a potentially hydrogenous atmosphere. The film driving mechanism of the camera is magnetically shielded, and can work under a stray magnetic field of about 2 kG. Each camera has *its own optical transport system, by means of which the frame-number of* the picture is labelled by using a small light-emitting data box attached on the right hand side of the camera.

The lens was designed to satisfy the following requirements ; (i) it should have high resolving power, (ii) it should be almost free from distortion and other aberrations, (iii) its pupil should be in close agreement with the positon of the nodal point for the whole field angle and (iv) its diameter should be small, because the light source or flash tube must be as close as possible to the pupil of the lens as is suitable for using Scotchlite SPR-1042.

It is well known that a lens can be made without distortion for a magnification of 1, if it is made symmetrically with respect to its stop. There are in general two kinds of symmetrical lenses, a negative-positive-negative type and a positive-negative-positive type. Since the bubble chamber requires a wide angle lens, the negative-positive-negative type has been adopted. Some modifications have been made for the lens in order to obtain 1/27 in magnification for the KEK 1 m HBC camera system. The lens and the camera system are all manufactured by the Canon Co., Ltd.. Figures 14-16 and Table 3 give the principal characteristics of the designed lens, together with the values obtained by the actual lens. The lens being used in the KEK 1 m HBC satisfies the above mentioned requirements well.

5-4. Film Format and Optical Constants

The film used in the KEK 1 m HBC camera system is of the Fuji *Minicopy film HR-II. It is unperforated 35 mm wide, with a 0.1 mm thick* polyester base. Each view has its own roll of total length 305 m. This film is panchromatic with low photorecording sensitivity of 390 lines/mm for a test-object contrast of 30:1. Its gamma-value is about 3.3. An antihalation layer of 1 μm thickness is coated on the polyester base and an emulsion of about 5 μm thickness is loaded on the layer. Shrinkage of the film is observed to be about 2×10^{-4} after conventional processing, which is usually done at the processing laboratory of the Fuji Film Co., Ltd..

The film format of the KEK 1 m HBC picture is shown in Fig. 17. The photographic pictures of the bubble chamber are taken with a magnification factor of 1/27 on the 35 mm film. Various data such as the view number, the roll-frame number of the current film and the data on the particle beam are recorded in Arabic and in binary form.

The optical constants of the bubble chamber, which are necessary for film analyses, are also determined. The principal parameters of the optical structure in the KEK 1 m HBC are given in Fig. 18. By using these parameters and the actual bubble chamber pictures taken at overall test operations, the optical constants are determined by using the program PYTHON developed at CERN. These optical constants are given in the form used in the program THRESH, also developed at CERN. The optical constants for use of the chamber with liquid hydrogen are given in Table 4.

6. The Bubble Chamber Magnet and Its Power Supply

A bubble chamber magnet for the KEK 1 m HBC and its power supply have been constructed. As is already described, the main parts of the bubble chamber are supported by the supporting frame fixed on the magnet yoke. Figure 3 shows the bubble chamber vessel, the vacuum tank, the magnet yoke and the magnet coil. The magnet coil consists of two parts, namely the main coil and the auxiliary coil. The magnet gives a maximum field of about 18.4 kG at the center of the bubble chamber fiducial volume when excited by the maximum current of 6500 A. The field is perpendicular to the window-glass of the bubble chamber.

This magnet was first constructed as a magnet for the old 75 cm test-chamber at the Institute for Nuclear Study of the University of Tokyo,[1)] where the Tanashi-branch of KEK was housed until the end of 1973, as mentioned in section 1. The magnet was then transferred to the Tsukuba-site of KEK and has been reconstructed at the Bubble Chamber Building of KEK, after remodeling for better insulation between magnet yoke and coil. The present dimensions of the magnet yoke are given in Fig. 19.

The magnet has a beam entrance window of 40 cm width and 80 cm height and an exit window of 25 cm(W) X 50 cm(H) on each side of the yoke. Perpendicular to the beam direction, a large elliptical camera extension window is made along the direction of the axis of the main coil. The bubble chamber pictures are taken through this camera extension window, by a set of three view stereo-camera located outside the magnet yoke. This magnet has, therefore, only one pole piece which has the shape of a race track of 112 cm and 92 cm in diameters and is situated at the rear of the bubble chamber.

The magnet yoke is made of about 100 tons of iron SM41C, and the pole piece is of iron SC-37. The yoke is to be divided into four main blocks. Two blocks at the beam direction are mounted on a concrete base, and hold the supporting frame of the bubble chamber vacuum tank as described in section 3. A third block at the camera extension side is mounted on its own carrier in order to move the block and coil apart from the bubble chamber vacuum tank. At the pole piece side a fourth block of similar mechanism is also installed. This mechanism is quite useful when repair work on the coil or detector assembling work around the vacuum tank are necessary.

The magnet coil consists of two parts, the main coil and the auxiliary coil as mentioned previously. The main coil is further composed of six coil-elements. Each coil-element has the flat shape of a race track. The auxiliary coil consists of two coil-elements, which are very similar to the ones of the main coil in their shape and dimensions. Each magnet coil-element is wound doubly, using a pair of copper hollow-conductors insulated from each other, and connected electrically in series. The electrical resistance of the magnet coil amounts to about 50 mΩ, when the main and the auxiliary coils are connected in series. The magnet coil works at about 335 V and the maximum power dissipated in the coil is about 2.2 MW at the maximum current of 6500 A. To prevent the magnet coil from rising in temperature, a cooling line of pure water of 10 kg/cm^2 pressure is provided to send cooling water to each hollow-conductor of the copper coil.

The cooling line of pure water makes a closed circuit including a heat-exchanger and a reservoir tank of the pure water, which is purified through ion-exchange resin. Dissipated electric power is released into the atmosphere through the heat-exchanger and the cooling tower for the secondary coolant of normal water. The temperature rise of pure water is normally kept under approximately 50°C at the maximum current of 6500 A, when the pure water line keeps the flow rate at about 560 ℓ/min.

A 2.2 MW dc power supply has been reconstructed after making various tests using the old test power supply. A careful design was made with a special emphasis on the problem of suppressing lower order harmonic currents from going back to the primary ac line in the thyrister rectifying system. The actual detailed design and construction work of the power supply were made by the group of Hitachi Co., Ltd.. Figure 20 shows a block diagram of the power supply. The principal circuit in the figure is a twelve-phase thyristor rectifying system which is composed of two six phase circuits, the star (⅄) line and the delta (Δ). A couple of dc currents rectified in each circuit, which has a phase difference of 30 degrees each other, are piled up through a reactance (DCL), and then fed into the magnet coil. The dc current is transmitted to the coil which is 50 meters distant via aluminum feeding bus bars, since the power supply is installed outdoors. Power thyristors used in the circuit are Hitachi CJ02Y. To achieve a stability of the magnet current of less than 0.1 % fluctuation during weeks of the bubble chamber operation, a dc current transformer (DCCT) is used at each rectifying circuit because it is less affected by temperature. This is important, because the main parts of the power supply, including power thyristors, are installed outdoors. Amplifiers and power supplies needed to control the DCCT, which are sensitive to the surroundings are kept in a constant temperature box housed in the bubble chamber control room.

The DCCT used is a current detector, Dyn Amp 4CXM developed by Halmar Electronics Inc. U.S.A.. Its principle is shown in Fig. 21. A Hall-element is mounted on the cross section of a square core. A coil is wound on the core frame to cancel the magnetic field induced in the core by a dc current passing through the center of the core. The dc current is measured by reading the feedback current to the canceling coil, so that the Hall-element detects no field. The output signal from the DCCT is transferred to an automatic pulse phase shifter after amplification and then to the power thyristor gates regulating the magnetic coil current.

The bubble chamber is expected to be mostly operated at the maximum magnetic field or at a certain fixed field. The power supply for the KEK bubble chamber magnet has therefore only three current ranges within a relatively narrow region. It is favorable to design such a power supply so that its variable current range is narrow, because only a small change in the thyrister firing angle α, which controls the magnetic current, can cover the region easily with no need to switch to the primary voltage.

The power supply is controlled to a current setting accuracy of 0.1% by a control console located in the bubble chamber control room. The power supply is stable enough to keep the current constant with a stability of less than 0.1% drift for every 8 hours, after about half an hour for warming up the circuit. Regulation is also made better than 5×10^{-4} for any primary voltage change of ±3% automatically, provided that the coil resistance change is kept within about 10%, in any current range. To check the drift of the magnet current, the output voltage of the DCCT is typed out by a data logging system every one hour. For regulation monitoring, the voltage deviation of the DCCT with respect to a reference voltage is continuously recorded. Peak to peak current ripple is less than 0.1%, since a twelve phase rectifying system is adopted and also because the magnet-coil has a relatively large inductance, estimated to be approximately 250 mH, from the magnetic field distribution. The reproducibility of the current setting value and other specifications of the power supply are listed in Table 5.

Because of a special design by utilising the twelve phase thyristor rectifying system, the power supply is actually found to give no serious noise back to the primary ac lines. The observed lower order harmonic currents are well suppressed to values of less than 1/10n (where n=3, 5, 7, ...) and 1/40n (wher n=2, 4, 6, ...), respectively.

Measurements of the magnetic field-map of the bubble chamber have been carried out using specially designed equipment which measures the field-map automatically, with an equal spacing interval (usually 5 cm apart in each axis of three-dimensional space), covering a much wider area than that which the fiducial volume of the chamber occupies.

To measure field values in three dimendional components simultaneuusly, three pieces of a Hall-element were used. These Hall measuring elements were well stabilized in a temperature-compensated cell, and were calibrated by comparing the measured value with the value obtained by the NMR-standard field meter, at a standard magnetic field. Measurements were made for six magnet current values from 2000 A up to the maximum 6500 A. Figure 22 shows a typical map obtained in the run. The complete field map will be expressed in terms of a polynomial representation to make the map easy to use in the bubble chamber film analysis program. More detailed descriptions of the magnetic field measurements and the results of the run will be reported separately along with a complete table of the field map in terms of polynomial expressions.

7. Operational Characteristics

7-1. Operations

Up to January, 1978, there have been, in total, seven operations made with the bubble chamber. Each operation concerned specific items to be tested step-by-step. In particular in the fifth operation performed in February, 1977, the bubble chamber was exposed to an acculerator beam in coincidence with a beam pulse for the first time. The bubble chamber magnet was also operated with full excitation of 6500 A for the first time in this operation, in combination with other major associated facilities of the chamber. It was found in this operation that there were many items to be improved. Among others, the bubbles forming beam tracks did not grow large enough to make pictures of clear tracks, because of a saturation tendency of the dynamical pressure drop. The other important problem to be solved was that the non-uniformity of illumination of the photographic picture.

The seventh operation was performed from December, 1977 to January, 1978 after such items as those mentioned above had been improved. The operation was successful with about 500 thousand expansions during about three week's operation. About 300 thousand pictures with incident pion beams were taken. All in all the systems of the KEK 1 m HBC worked well in this seventh operation. In this section, we will describe operational characteristics which were mostly obtained in the seventh operation.

7-2. Temperature and pressure control of the chamber

The chamber was cooled down with liquid hydrogen through the neck-cooler cooling line. The average cooling rate was about 4 K/hr during the whole range of cooling down. Filled hydrogen gas for the chamber was supplied at a pressure of about 1.5 atm, through the cryogenic purifier, and liquefied at the neck-cooler inner-surface with a rate of about 20 ℓ/hr. The liquid hydrogen level in the chamber was monitored by four level-indicators utilizing a vapor pressure thermometer installed along the wall of the piston cylinder and also inside the piston cylinder. It took about 110 hours from the start of cooling to fill the chamber with about 450 ℓ of liquid hydrogen up to a level just above the cold piston.

Temperature and pressure control of the chamber was successfully made using three cooling loops : the neck-cooler cooling loop, piston cylinder cooling loop and the gas-cooler loop. The heat loss due to the bubble chamber expansion came mainly from the Carnot-cycle heating, the frictional heat between the piston ring and the cylinder wall, and from the heat loss caused by splashing of liquid hydrogen. Though the piston movement in a gradient magnetic field caused Joule heat due to eddy current, the amount of this heat was calculated to be so small as to be negligible, because of the weak magnetic field.

The Carnot-cycle heating was to be compensated by the neck-cooler and the amount of heat loss was calculated to be about 320 W, from data concerning the piston stroke and the dynamical pressure drop. Figure 23 shows a typical diagram of pressure drop and expansion volume.

The idea for temperature control of this chamber was such that the temperature of coolant transferring into the neck-cooler was to be kept constant and the heat-unbalance was to be compensated by the change of flow rate of the coolant. The big advantage of this method is that one can select the coolant temperature to be arbitrarily constant as long as it is kept lower than the working liquid temperature. The fluctuation of the temperature of liquid hydrogen in the 4000 ℓ reservoir tank, therefore, has no effect on the temperature of the coolant.

The splashing heat loss, which was expected to be absorbed at the gas-cooler, was estimated to be about 400 W from the flow-rate through the gas-cooler loop.

The four control valves; the PCV-3 and the TCV-1 for temperature control in the neck-cooler loop, the PCV-4 for pressure control in the gas-cooler and the PCV-7 for cooling the piston cylinder, worked perfectly. Figure 24 shows the typical records of the temperature and pressure of the chamber under normal operation during the seventh operation. The records clearly show that the chamber can be operated quite satisfactorily with a stability of the temperature to within 0.03 K at 25.7 K, and of the pressure to within 0.05 atm at 4.35 atm.

7-3. Dynamical pressure of the chamber

A strain gauge pressure transducer of 20 atm rated pressure, made of SUS-316L stainless steel, was installed at the upper part of the chamber body to monitor dynamical pressure change in the bubble chamber, during one expansion. The transducer signal was displayed on a four-sweep oscilloscope, together with a piston moving signal, a flash firing signal and a beam-in signal. The calibration of the strain gauge was made by varying the static pressure of the bubble chamber, after filling the chamber with liquid hydrogen.

Figure 12 shows a typical record of the display of the oscilloscope. It was found that the dynamical pressure-drop in the chamber was 3.2 atm, which corresponds to 25 mm expansion stroke.

7-4. Data logging for the chamber-operation

To improve the reliability of the bubble chamber operation and to save man-power in making records of operating conditions of the chamber, a digital mini-computer system, the YODIC-100, was installed, and operated for the first time in the fifth operation.

This YODIC-100 system is equipped with 20 K words of core memory, two typewriters, a high speed tape-reader and a 14-inch color graphic display. It has 48 analogue and 160 digital input channels and 32 digital output channels. The 36 analogue channels were mostly used to monitor temperature and pressure of the chamber at various points. The accuracy of this analogue data was found to be 0.5 %. Some digital channels were connected to a wave form analyser which sampled the dynamical pressure of the chamber. Other digital channels were used for monitoring the camera system and beam line.

Some special purpose routines, performing necessary data acquisition and processing, were prepared. The analogue data was gathered once in every ten seconds. The last ten data from all channels were stored so as to display the general trend of the data, when necessary. The digital data was taken once in every two seconds, synchronized with the expansion of the chamber. Alarming units were also furnished in the system to give notice to operators whenever necessary.

A graphic display which showed two kinds of histograms one for analogue data and one for the beam line, was used at the operation. The system was completed and the apparatus worked reliably.

8. Conclusions

The construction of the KEK 1 m HBC is now completed and it is ready for stationary use with various incident particles from the KEK 12 GeV Proton Synchrotron. In the seventh operation, a beam exposure experiment was made by using π^- beams of 6 GeV/c, from a target on which *a fast-extracted proton beam of 8 GeV was incident. Figure 25 shows a* typical picture of the 6.0 GeV/c $\pi^- p$ interactions that occurred in the chamber.

As far as the overall performance of the KEK 1 m HBC system is concerned, each apparatus of the system is functioning well. The basic operational characteristics of the cooling system using the PCV-4 pressure and the PCV-3 and TCV-1 temperature control valves are now well established. This achievement enables us to carry out a stationary beam exposure run with stable operating conditions in the bubble chamber. The magnet and its 2 MW power supply are working beautifully without any problems of lower order harmonic currents feeding back to the primary ac line. The magnetic field stability is also satisfactory, although the field map is not flat because of the structure of the magnet-yoke and one pole-piece. This may give some problem to a film analysis program such as the THRESH-GRIND system in tracing particle momenta along their tracks.

There are, however, many items yet to be improved. Among others the quality of the photographic picture of the chamber is one of the most important points. In particular, the Scotchlite light reflector began to break down after about 200 thousand expansions, although most pictures taken were available for analysis by using the KAMA-system, the KEK Automatic Film Measuring Apparatus.[4)] The method of sticking the Scotchlite on the inner surface of the chamber is under various trials.

A test run has been made for a double pulse operation of the KEK 1 m HBC during one flat-top beam pulse. It is necessary to make further detailed investigations of the dynamical characteristics for the double pulse operation. There are also various efforts being made to make a hybrid trigger facility for this bubble chamber system.

Acknowledgement

The authors are grateful to Professor I. Miura, Professor S. Yasumi and Professor S. Suwa for their constant encouragement. Most of the fundamental parts of the bubble chamber cryogenic system are manufactured by the engineering group of the Nippon Sanso K.K.. Their very diligent collaborations in the construction and operation of the bubble chamber should be highly appreciated. We are also thankful to Professor I. Kita of Tokyo University of Agriculture and Technology, for his advice and comments on the design of the KEK 1 m HBC system. Thanks are due to the Main Ring Power Supply group, Accelerator Department of KEK, for their valuable discussions on the design of the power supply for the bubble chamber magnet. We wish to thank our colleagues in KEK for help in carrying out the operation of the bubble chamber.

References

1) H.Hirabayashi et al.: Japan. J. appl. Phys. 11 (1972) 1187.
2) Y.Doi et al.: Proceedings of the third Seminar on the Bubble Chamber Physics in Japan, held at Tokyo, 1973 (in Japanese).
3) The 1974 KEK annual report.
4) A.Ono et al.: Nuclear Instrum. and Methods 141 (1977) 193.

Table 1. Principal parameters for the KEK 1 m HBC.

Material	Modified CK-20 (3.8 % Mn stainless steel)
Expansion volume	430 ℓ
Visible volume	280 ℓ
Chamber diameter	90 cm at front side and 105 cm at rear side
Chamber depth	38 cm
Viewing window glass	BK-7 optical glass with refractive index of 1.516 and with a dimension of 100 cm rear side diameter, 92 cm front side diameter and 14.5 cm thickness
Vacuum system	14 inch diffusion pump followed by two rotary pumps
Cooling system	Three cooling loops : a neck-cooler loop, a piston cylinder loop and a gas-cooler loop

Table 2. Principal parameters of the hydraulic expansion system of the KEK 1 m HBC.

Parameter	Value
Expanded liquid volume	430 ℓ
Piston diameter (A)	450 mm
Maximum stroke (1.8 % expansion)	50 mm
Stroke for 1 % expansion	27 mm
Chamber spring constant (K_5)	1570 kg/cm
Reciprocating mass (M)	130 kg
Force required for 1 % expansion	12 ton
Maximum piston velocity	4m/sec
Maximum piston acceleration	70 G
Chamber cycle time	35 msec
Oil pressure	210 kg/cm^2
Flow rate of oil	300 ℓ/min
Effective area of hydraulic actuator (S)	70 cm^2

Table 3. Principal characteristics of the designed lens.

Parameter	Value
Focal length	54.95 mm
Field angle	60 degrees
Ratio of aperture	F/8
Magnification	1/27
Overall diameter	47 mm
Overall length	82 mm
Entrance pupil	20.196 mm
Exit pupil	22.742 mm
Entrance nodal point	20.196 mm
Exit nodal point	22.739 mm
Distance between two above nodal points	25.782 mm

Table 4. Optical Constants of the KEK 1 m HBC

CAMERA-Block

	x	y	z
CAMERA 1	-19.946	-28.898	143.328
CAMERA 2	-19.824	28.310	143.284
CAMERA 3	37.337	-0.463	143.406

MEDIA-Block

4	index	thickness
MEDIUM 1	1.000	4.562
MEDIUM 2	1.459	3.006
MEDIUM 3	1.000	121.240
MEDIUM 4	1.516	14.521
MEDIUM 5	1.095	37.964

REFER-Block

18

	VIEW 1		VIEW 2		VIEW 3	
	x	y	x	y	x	y
F 2	5.179	57.025	5.033	-2.830	-54.814	27.298
F 3	36.571	57.095	36.331	-2.833	-23.379	27.223
F 5	-10.475	30.840	-10.602	-28.876	-70.595	1.159
F 6	20.808	30.853	20.674	-28.893	-39.035	1.154
F 7	52.223	30.915	52.079	-28.966	-7.714	1.145
F 9	5.142	4.764	5.030	-55.056	-54.804	-24.986
F10	36.449	4.763	36.420	-55.136	-23.376	-24.931
B 1	0.145	54.224	0.049	6.320	-47.849	30.464
B 2	16.861	54.156	16.684	6.241	-31.045	30.298
B 3	33.604	54.145	33.357	6.167	-14.360	30.182
B 4	-18.668	37.575	-18.727	-10.189	-66.858	13.890
B 5	52.353	37.334	52.131	-10.600	4.299	13.420
B 6	-18.770	12.550	-18.901	-35.196	-66.983	-11.234
B 7	52.112	12.229	52.086	-35.701	4.173	-11.520
B 8	-0.149	-4.175	-0.254	-52.035	-48.110	-28.002
B 9	16.470	-4.275	16.432	-52.145	-31.335	-28.028
B10	33.150	-4.348	33.176	-52.297	-14.648	-28.071
B11	16.635	24.845	16.529	-22.840	-31.140	1.142

COREC-Block

	COR 1	COR 2	COR 3
LENS 1	0.0004	-0.0002	0.0019
LENS 2	0.0006	-0.0003	0.0023
LENS 3	-0.0007	-0.0011	0.0003

Table 5. Electrical characteristics of the power supply.

Input power supply	
Voltage	ac 6600 V
Phases	3
Frequency	50 Hz
Voltage fluctuation	± 3 % daily
Output	
dc current control	(1) 1500–3000 A (2) 5000–5500 A (3) 6000–6500 A
Max. output voltage	dc 335 V
Current drift	Less than 1.0×10^{-3}/8hr
Regulation	Less than 5×10^{-4} for ± 3 % line changes and 10 % load change
Ripple factor	Less than 1.0×10^{-3}
Current setting precision	Less than 1.0×10^{-3}
Current setting time	Max. 10 A/sec at any current ranges
Reproducibility of current value	Less than 5×10^{-3} for start-stop operation

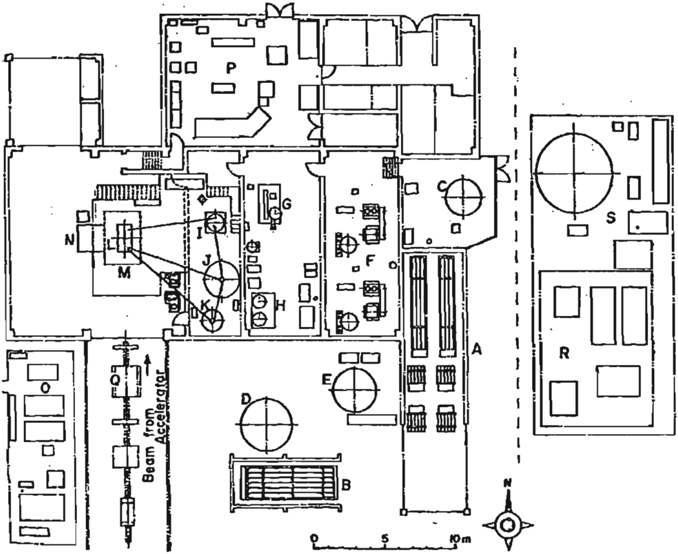

Fig. 1 Brief sketch of a plan view of the KEK 1 m HBC facility and its building. (A) and (B) storage bottles of high pressure hydrogen gas, (C) reservoir tank of liquid nitrogen, (D) holder of low pressure hydrogen gas, (E) holder of low pressure deuterium gas, (F) hydrogen gas compressors, (G) deuterium gas compressor, (H) hydrogen gas purifiers, (I) hydrogen liquefier, (J) 4000 ℓ liquid hydrogen reservoir tank, (K) 1000 ℓ liquid deuterium reservoir tank, (L) bubble chamber, (M) 2 MW bubble chamber magnet, (N) three view stereo camera, (O) hydraulic power supply, (P) control room, (Q) beam channel, (R) electric power supply for 2 MW magnet, (S) cooling stage for 2 MW magnet.

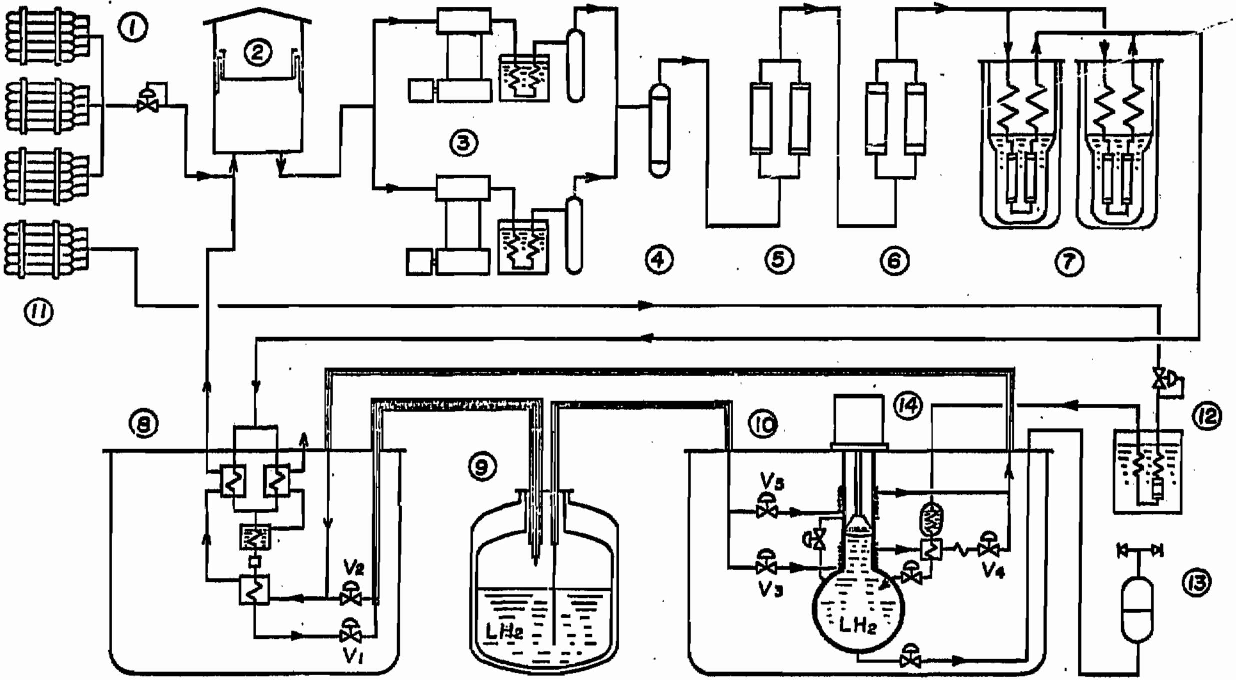

Fig. 2. Schematic flow diagram of the cryogenic system of the KEK 1 m HBC.

(1)-(10) : Facilities for liquefying hydrogen gas and for cooling the bubble chamber. (1) storage bottles of high pressure hydrogen gas, (2) holder of low pressure hydrogen gas, (3) hydrogen gas compressors, (4) oil separator, (5) oil adsorbers, (6) dryers, (7) cryogenic purifiers, (8) hydrogen liquefier, (9) 4000 ℓ reservoir tank, (10) cooling loops of bubble chamber. (11)-(14) : Facilities for charging hydrogen gas to the bubble chamber. (11) storage bottles of high pressure hydogen gas, (12) cryogenic purifier, (13) emergent ventilator, (14) bubble chamber.

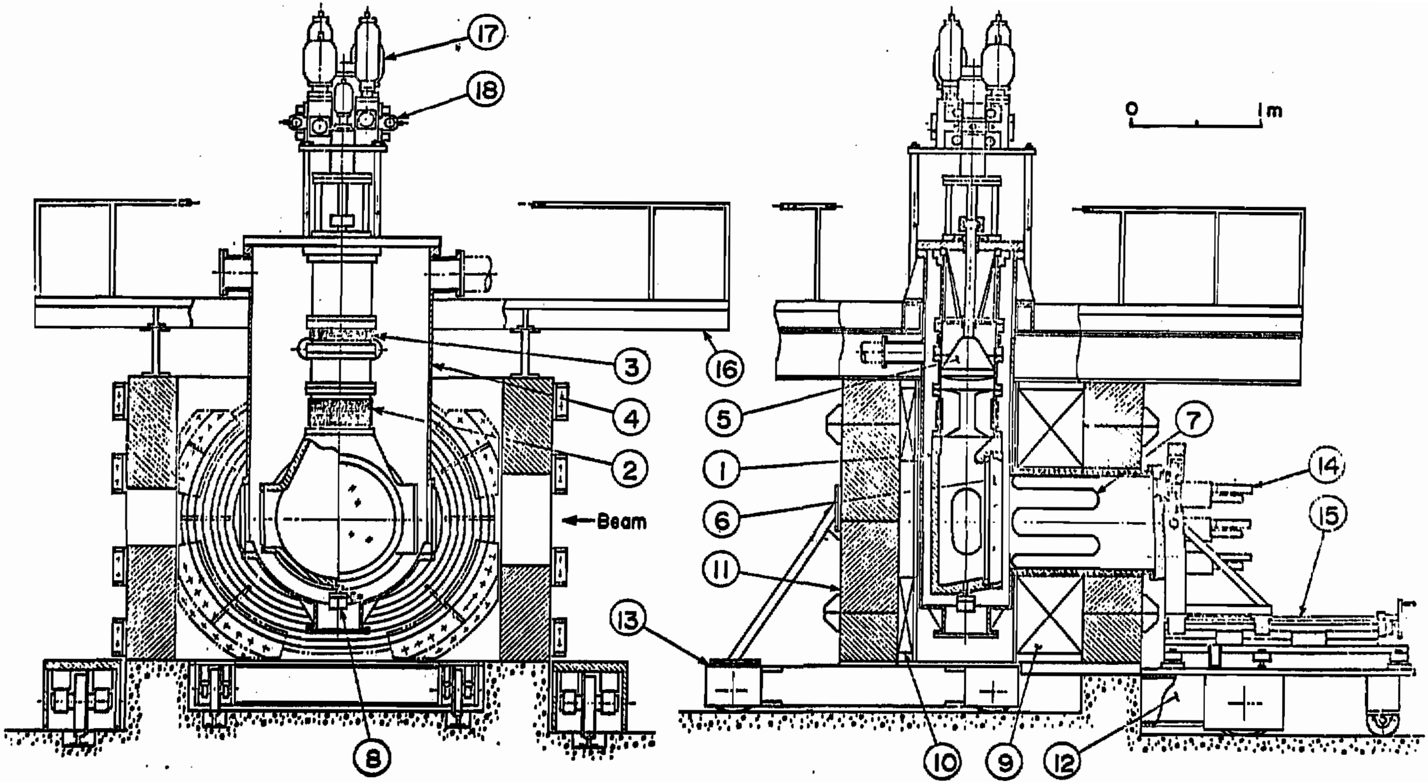

Fig. 3. Cross-sectional view of the bubble chamber, the vacuum tank, the magnet yoke, the magnet coil, the expansion system and the camera system. (1) chamber body, (2) neck cooler, (3) gas cooler, (4) vacuum tank, (5) cold piston, (6) viewing window, (7) camera extension shield, (8) cold valve, (9) main coil, (10) auxiliary coil, (11) magnet yoke, (12) carrier for front block of yoke, (13) carrier for rear block of yoke, (14) cameras and its panel, (15) movable stage for camera panel, (16) stage, (17) actuator of hydraulic expander, (18) servo valves.

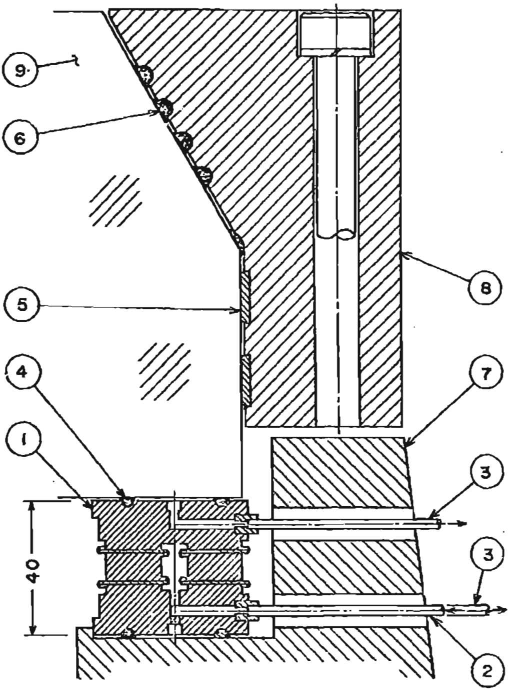

Fig. 4. Cross section of the inflatable gasket for making vacuum seal between the viewing window glass and the bubble chamber vessel. (1) inflatable gasket, (2) pressure inlet line, (4) indium seal, (5) Teflon protection ring, (6) indium protection ring, (7) chamber body, (8) Ti-window frame, (9) viewing window glass.

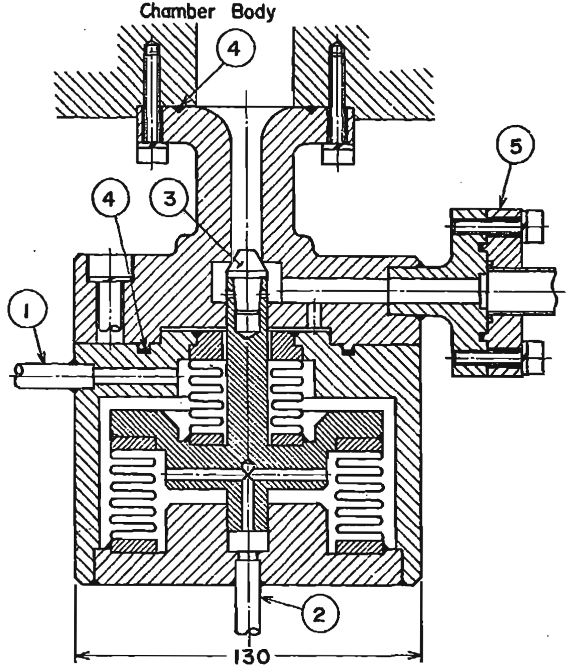

Fig. 5. Cross section of the cold valve used at the bottom of the bubble chamber body. (1) pressure inlet to open valve, (2) pressure inlet to close valve, (3) tungsten carbide plug, (4) indium seal, (5) main dump coupling flange.

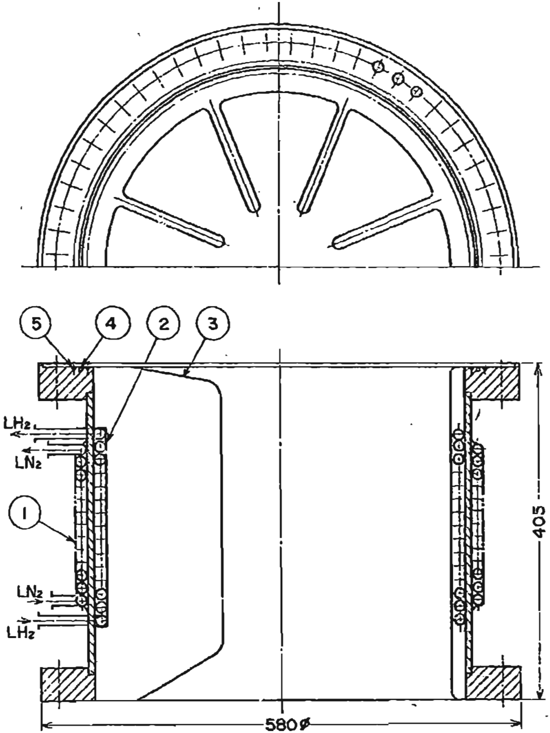

Fig. 6. Cross section of the neck-cooler cylinder. (1) pre-cooling line, (2) cooling line, (3) copper fin, (4) guard vacuum groove, (5) indium seal.

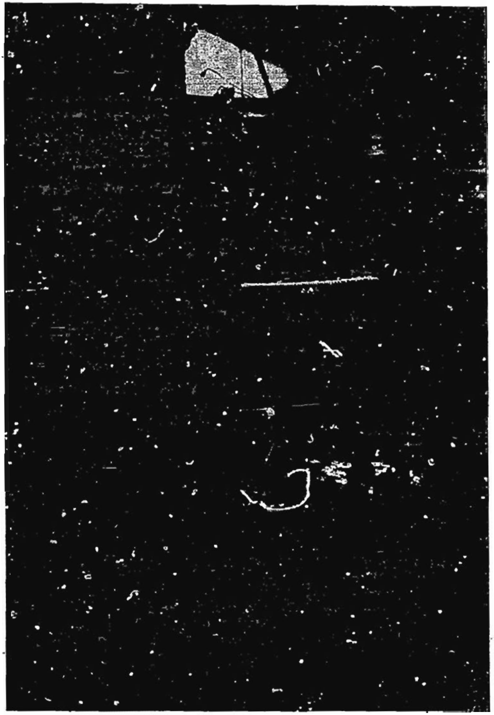

Fig. 7. A photographic picture of the 1 m bubble chamber vessel, wrapped with superinsulator sheets.

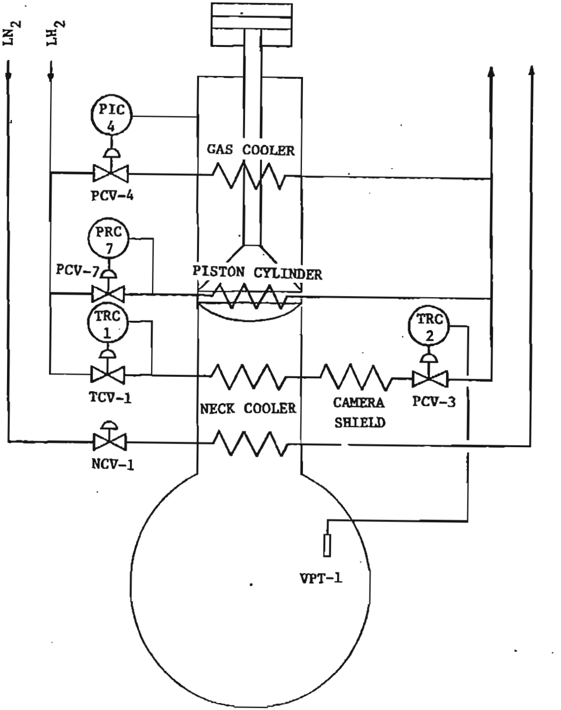

Fig. 8 Schematic diagram of the cooling loops of the bubble chamber.

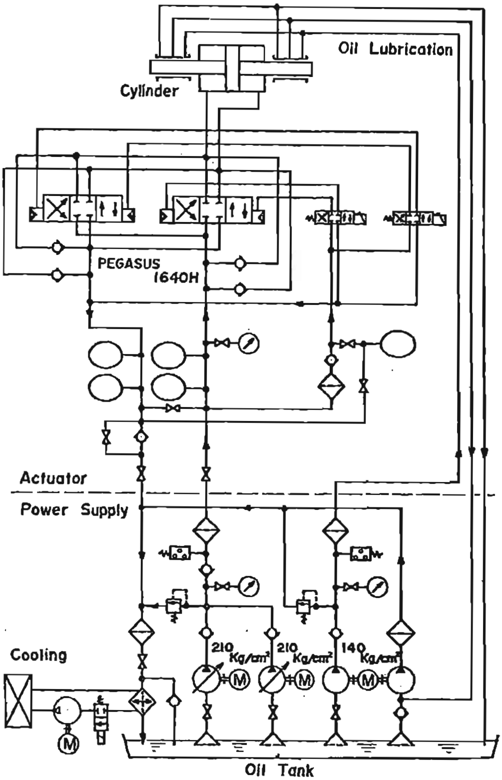

Fig. 9. A schematic diagram of the hydraulic expansion system.

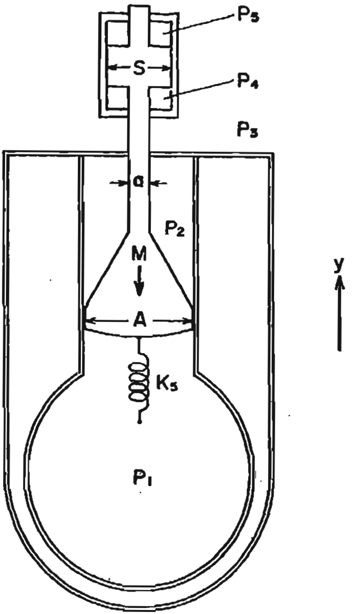

$$M\frac{d^2y}{dt^2}=(P_4-P_5)S+(P_2-P_3)a-MG-(P_2-P_1)A \qquad (1)$$

$$(P_1-P_2)A+(P_2-P_3)a=-K_3y \qquad (2)$$

Fig. 10. Kinematics of the expansion.

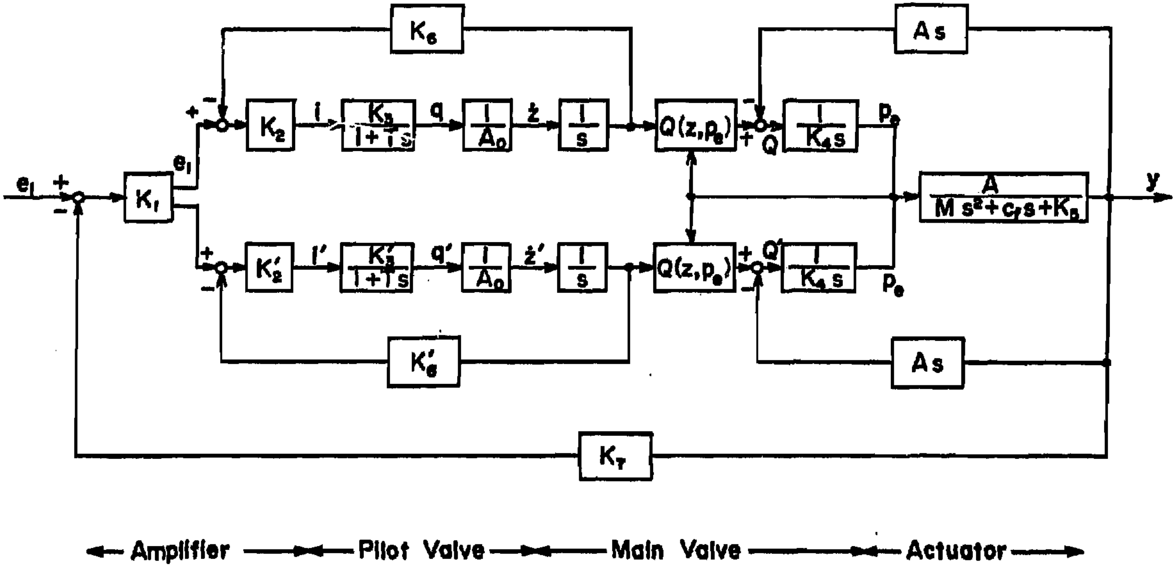

Fig. 11. A block diagram of the circuit for the hydraulic expansion system.

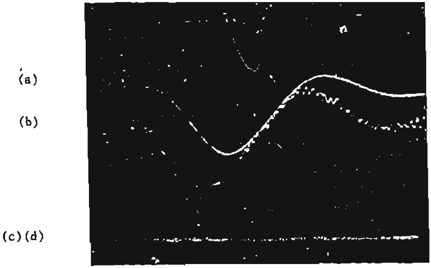

Fig. 12. A typical picture of the display of the four-sweep oscilloscope. (a) piston stroke (12.5 mm/div.), (b) strain gauge output expressing dynamical pressure drop in bubble chamber (1.4 atm/div.), (c) flash timing, (d) beam-in timing. Time scale is 5 msec/div..

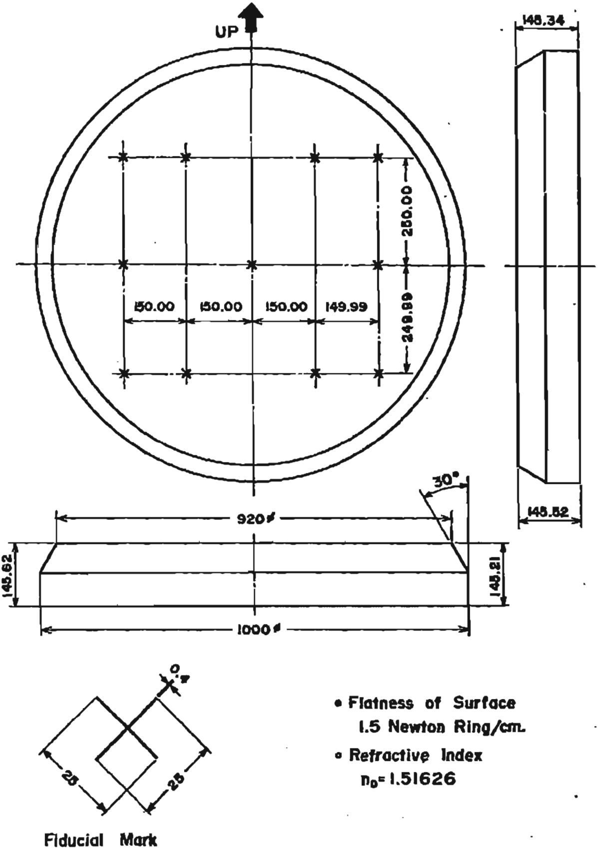

Fig. 13. Window glass.

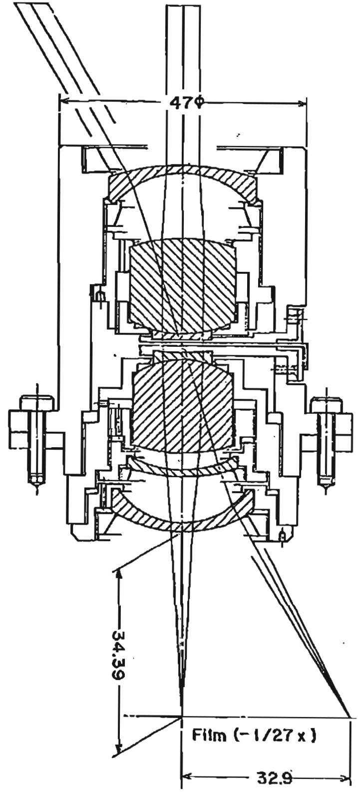

Fig. 14. Designed lens.

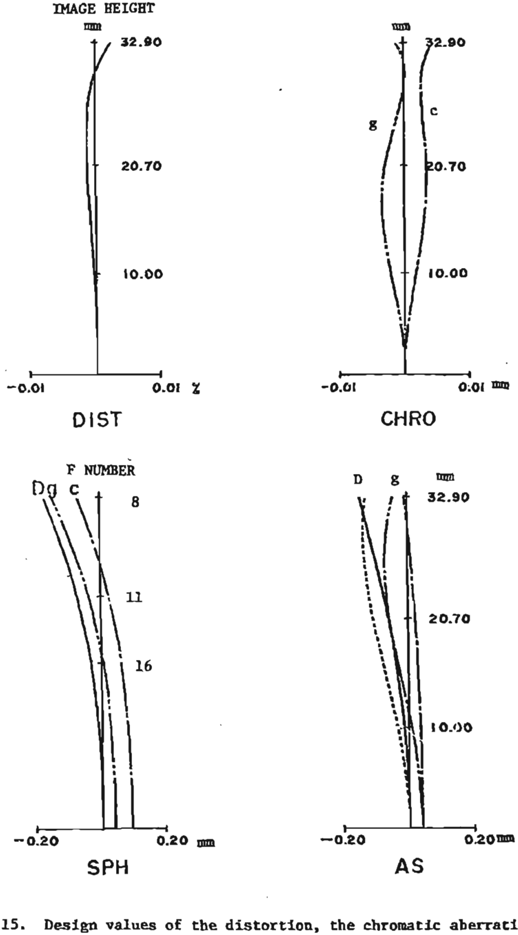

Fig. 15. Design values of the distortion, the chromatic aberration, the spherical aberration and the astigmatism.

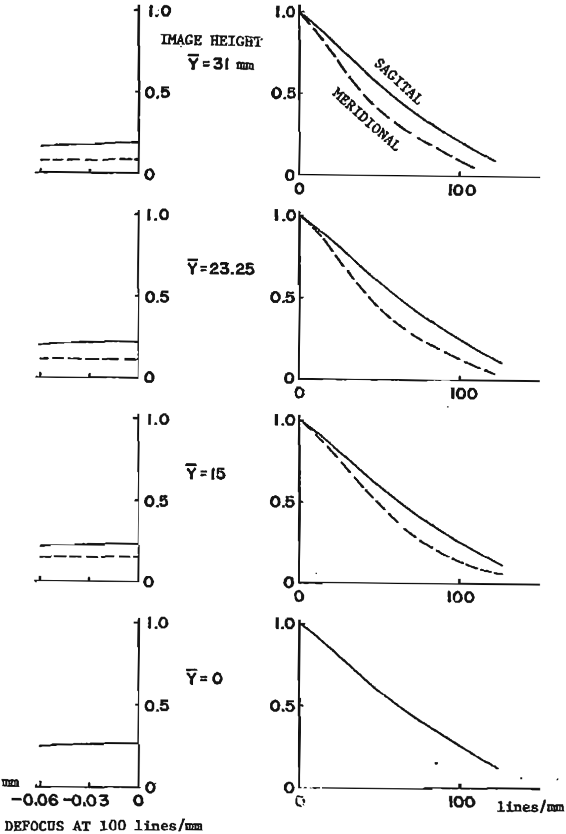

Fig. 16. Design response function for F/11 when the ratio of spectra is as following, d:g:c = 1:1:1. The measured response function agreed well with design values.

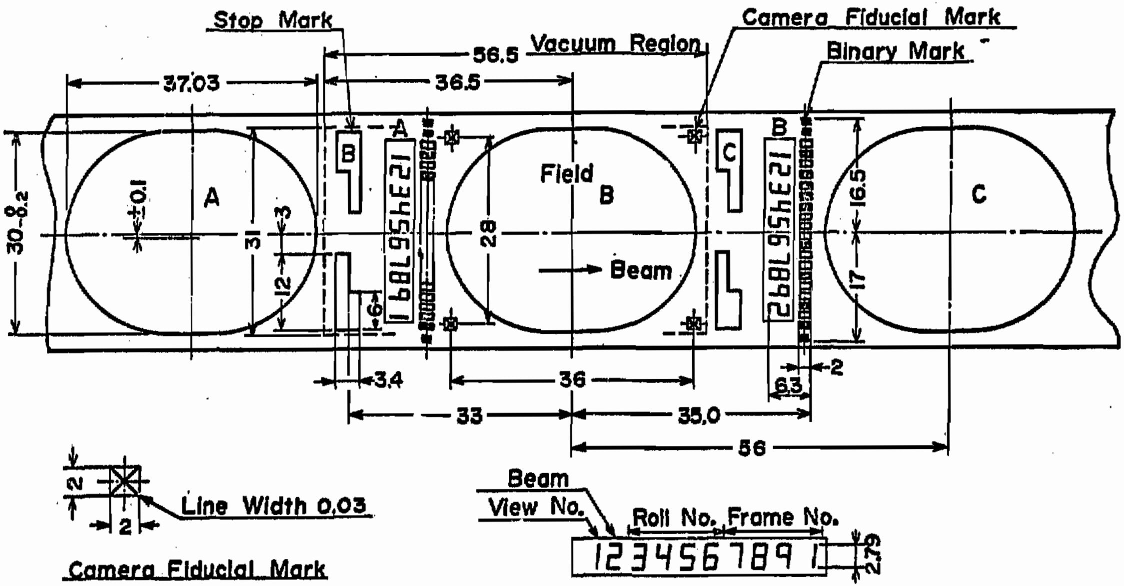

Fig. 17. A film format of the photographic picture of the KEK 1 m HBC.

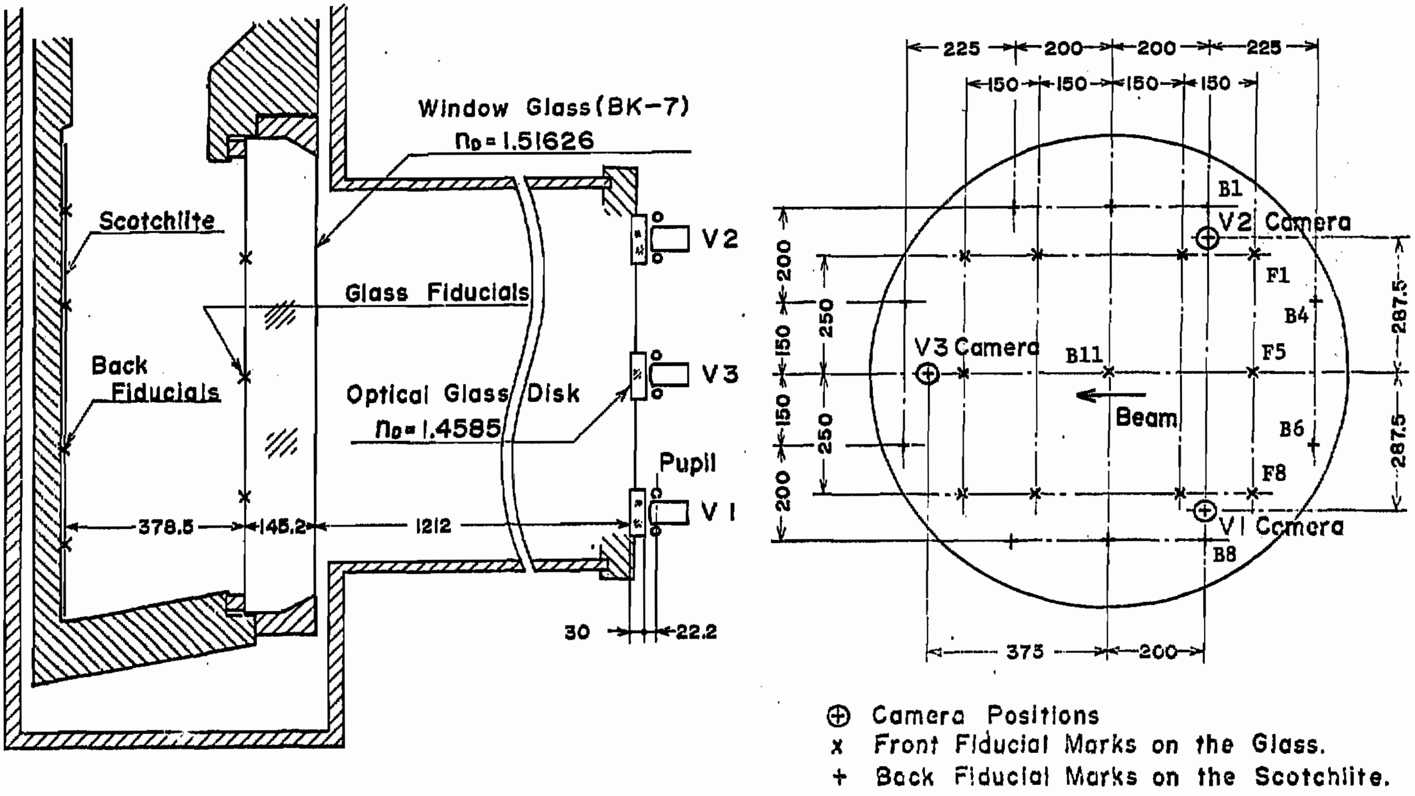

Fig. 18. Typical dimension of the optical system.

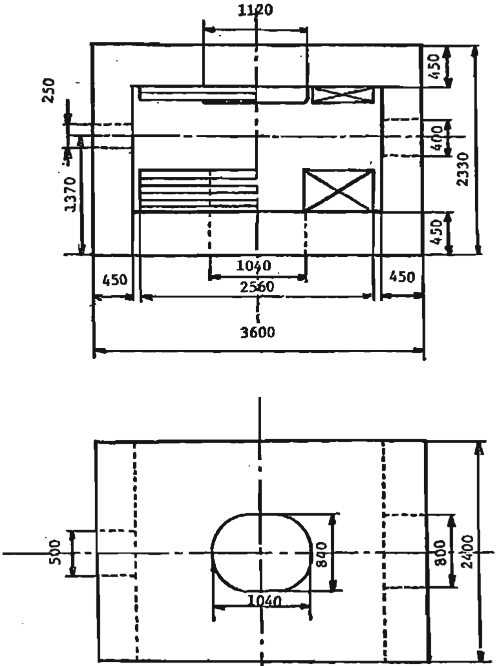

Fig. 19. A simplified figure of the magnet yoke showing principal dimensions of the yoke. Numbers in the figure are in mm.

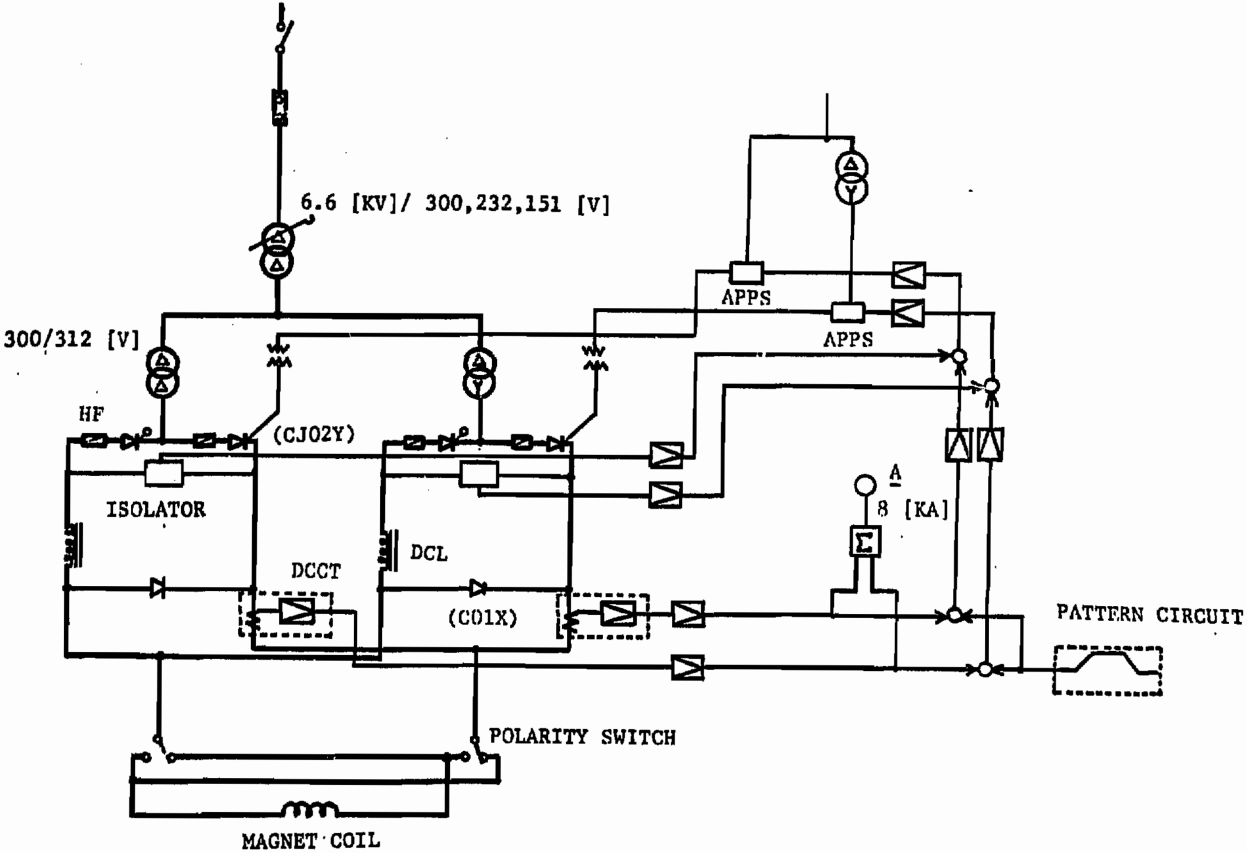

Fig. 20. A block diagram of the 2 MW magnet power supply with twelve phase rectifying system.

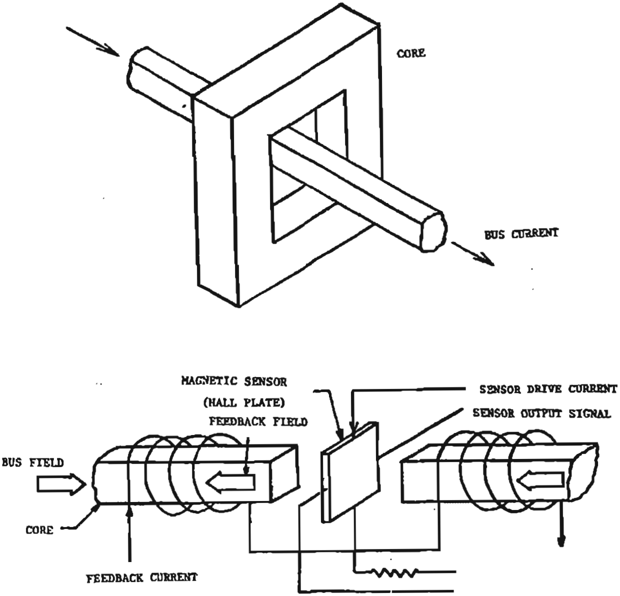

Fig. 21. A schematic drawing of a dc current transformer, illustrating its basic principle.

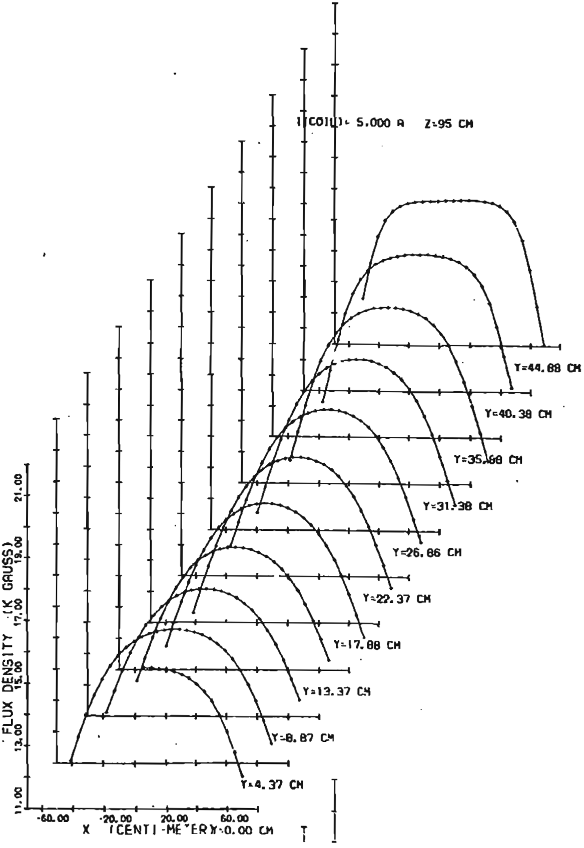

Fig. 22. A typical magnetic-field map obtained in the field measurement of the 2 MW bubble chamber magnet.

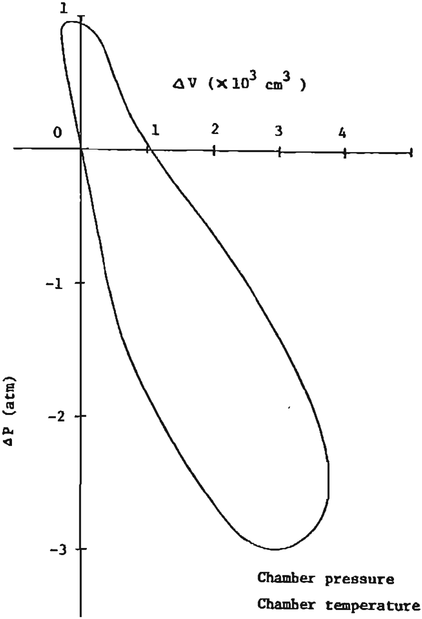

Chamber pressure	4.35 atm
Chamber temperature	25.7 K
Piston stroke	25 mm
Produced heat	640 J

Fig. 23. A typical diagram for the pressure-drop and expansion-volume in the Carnot cycle due to bubble chamber expansion.

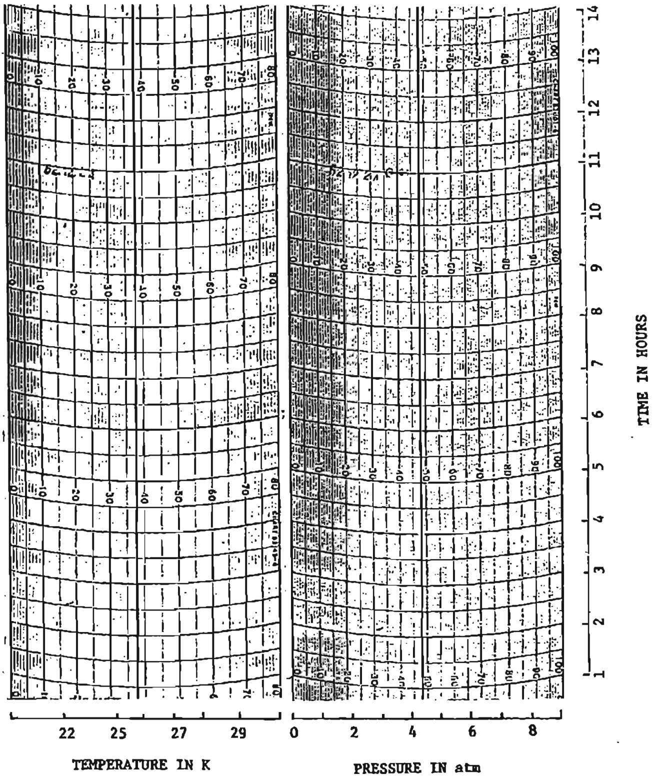

Fig. 24. A picture showing typical records of the bubble chamber operating temperature and pressure under the normal operational condition, recorded on the chart during the seventh operation of the KEK 1 m HBC.

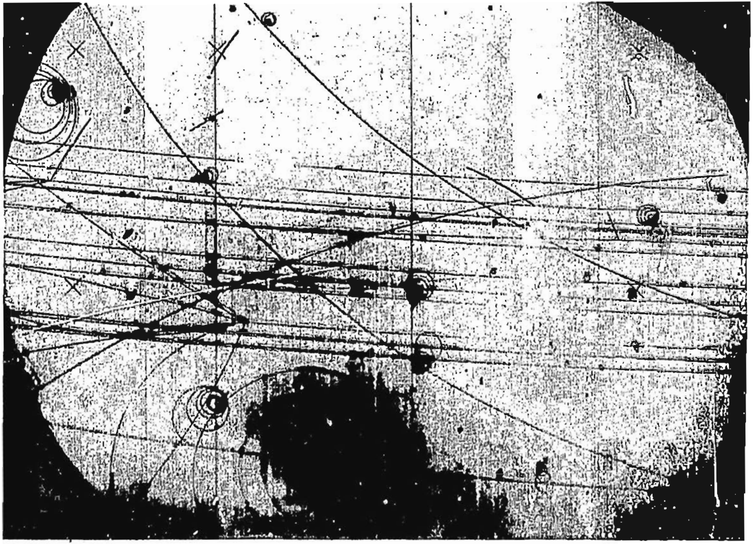

Fig. 25. A typical picture of the 6.0 GeV/c $\pi^- p$ interactions.